HEADOFFICE: Showroom 13 Sofokli Venizelou Ave., Likovrisi, P.O. Box 14123, Athens, Greece Tel: (+30) 210 2851 304 I www.bright.gr I info@bright.gr

CERNO 9 LED



Technical drawings

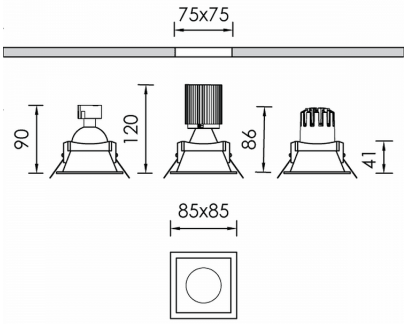

Product Details

CE

Source Type COB LED

General Information

Housing	Plastic
Product code	DL5362CL001DA
Product family	CERNO
Options for Dimming Control	DALI2
Width	85 mm
Length	85 mm
Height	120 mm

Electrical data

Consumption	6.35 W
Performance	107.09 lm/W
Ripple	3
Power Factor	0.96
Nominal Voltage	230 V

Luminaire Output

Beam Type	N
Beam	17º
Luminous Flux	680 lm
CRI CCT	930

Light distribution

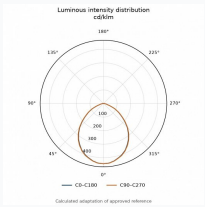

Safety characteristics

IP	20

Temperature Operating Conditions