CERNO 9 LED



Technical drawings

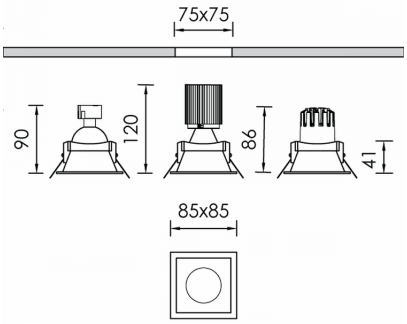

Product Details

CE

Source Type COB LED

General Information

Housing	Plastic
Product code	DL5376CL001ON
Product family	CERNO
Control Gear	Remote Electronic Driver
Options for Dimming Control	On-Off
Width	85 mm
Length	85 mm
Height	120 mm

Electrical data

Consumption	7.08 W
Performance	111.58 lm/W
Ripple	3
Power Factor	0.96
Nominal Voltage	230 V

Luminaire Output

Beam Type	W
Beam	36º
Luminous Flux	790 lm
CRI CCT	940

Light distribution

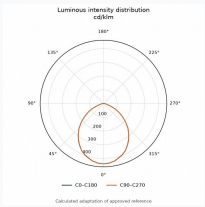

Safety characteristics

IP	20

Temperature Operating Conditions