CERNO 9 LED



Technical drawings

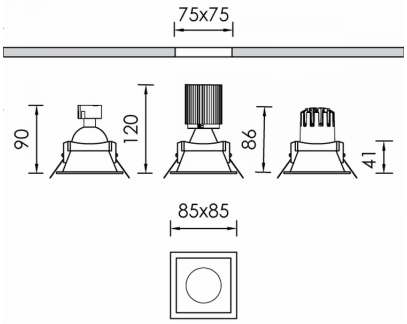

Product Details

CE

Source Type COB LED

General Information

Housing	Plastic
Product code	DL5385CL001DA
Product family	CERNO
Control Gear	Remote Electronic Driver
Options for Dimming Control	DALI2
Width	85 mm
Length	85 mm
Height	120 mm

Electrical data

Consumption	7.81 W
Performance	110.37 lm/W
Ripple	3
Power Factor	0.96
Nominal Voltage	230 V

Luminaire Output

Beam Type	W
Beam	36º
Luminous Flux	862 lm
CRI CCT	940

Light distribution

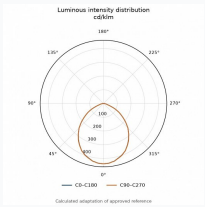

Safety characteristics

IP	20

Temperature Operating Conditions