CERNO 9 LED



Technical drawings

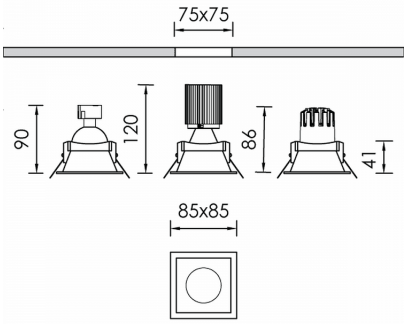

Product Details

CE

Source Type COB LED

General Information

Housing	Plastic
Product code	DL5386CL002ON
Product family	CERNO
Control Gear	Remote Electronic Driver
Options for Dimming Control	On-Off
Width	85 mm
Length	85 mm
Height	120 mm

Electrical data

Consumption	8.65 W
Performance	97.23 lm/W
Ripple	3
Power Factor	0.96
Nominal Voltage	230 V

Luminaire Output

Beam Type	N
Beam	17º
Luminous Flux	841 lm
CRI CCT	927

Light distribution

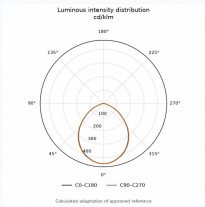

Safety characteristics

IP	20

Temperature Operating Conditions