# CERNO 9 LED



## Technical drawings

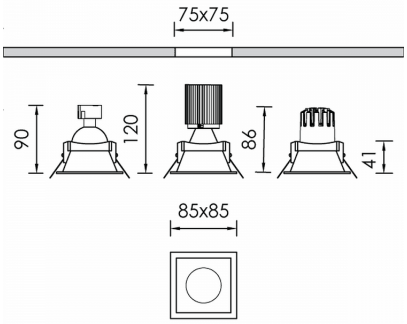


## Product Details

CE

Source Type COB LED

### General Information

| | |
|---|---|
| Housing | Plastic |
| Product code | DL5388CL002ON |
| Product family | CERNO |
| Control Gear | Remote Electronic Driver |
| Options for Dimming Control | On-Off |
| Width | 85 mm |
| Length | 85 mm |
| Height | 120 mm |

### Electrical data

| | |
|---|---|
| Consumption | 8.65 W |
| Performance | 97.23 lm/W |
| Ripple | 3 |
| Power Factor | 0.96 |
| Nominal Voltage | 230 V |

### Luminaire Output

| | |
|---|---|
| Beam Type | W |
| Beam | 36º |
| Luminous Flux | 841 lm |
| CRI CCT | 927 |

### Light distribution

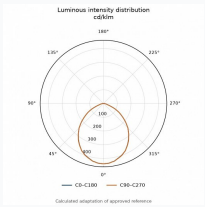


### Safety characteristics

| | |
|---|---|
| IP | 20 |

### Temperature Operating Conditions