CERNO 9 LED



Technical drawings

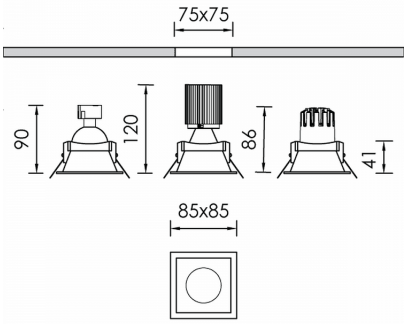

Product Details

CE

Source Type COB LED

General Information

Housing	Plastic
Product code	DL5388CL001DAC
Product family	CERNO
Control Gear	Remote Electronic Driver
Options for Dimming Control	DALI2
Options for Wireless Dimming	Casambi
Width	85 mm
Length	85 mm
Height	120 mm

Electrical data

Consumption	8.65 W
Performance	97.23 lm/W
Ripple	3
Power Factor	0.96
Nominal Voltage	230 V

Luminaire Output

Beam Type	W
Beam	36º
Luminous Flux	841 lm
CRI CCT	927

Light distribution

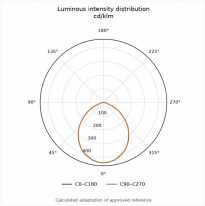

Safety characteristics

IP	20

Temperature Operating Conditions