MOBILIS SQUARE LED



Technical drawings

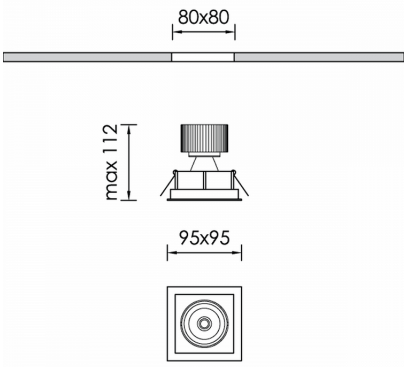

Product Details

CE LM80 LM79 TM21 REACH Source Type COB LED

General Information

Housing	Aluminium
Product code	DL5562CL002DA
Product family	MOBILIS
Diffuser	Safety Glass Clear
Control Gear	Remote Electronic Driver
Options for Dimming Control	DALI2
Width	95 mm
Length	95 mm
Height	112 mm

Electrical data

Consumption	8.3 W
Performance	105.78 lm/W
Ripple	3

Luminaire Output

Beam Type	ASY
Beam	-
Luminous Flux	878 lm
CRI CCT	930

Light distribution

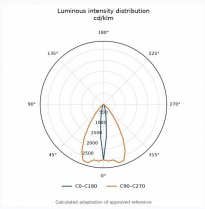

Safety characteristics

IK	03
IP	20
Protection Class	Class III

Temperature Operating Conditions