BENE 10F MOB



Technical drawings

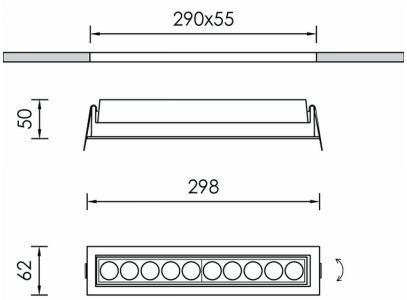

Product Details

CE

Source Type SMD LED

General Information

Housing	Aluminium
Product code	DL5652CL002ON
Product family	BENE
Control Gear	Remote Electronic Driver
Options for Dimming Control	On-Off
Width	62 mm
Length	298 mm
Height	50 mm

Electrical data

Consumption	18 W
Performance	105 lm/W
Nominal Voltage	230 V

Luminaire Output

Beam Type	W
Beam	38º
Luminous Flux	1890 lm
CRI CCT	940

Light distribution

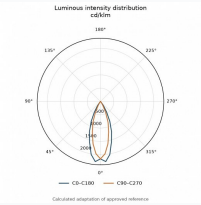

Safety characteristics

IK	04
IP	20

Temperature Operating Conditions