BRUTUS M



Technical drawings

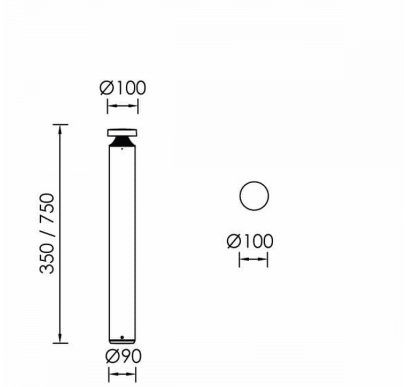

Product Details

CE

Source Type SMD LED

General Information

Housing	Aluminium
Product code	BO0455CL002DA
Product family	BRUTUS
Control Gear	Built-in ECG
Options for Dimming Control	DALI2
Height	350 mm
Diameter	100 mm

Electrical data

Consumption	6.5 W
Performance	49.85 lm/W
Nominal Voltage	230 V

Luminaire Output

Luminous Flux	324 lm
CRI CCT	840

Light distribution

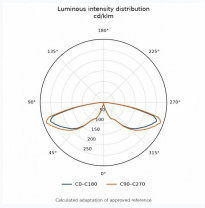

Safety characteristics

IK	10
IP	65

Temperature Operating Conditions