BRUTUS M



Technical drawings

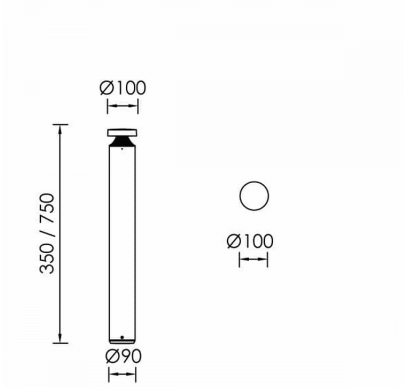

Product Details

CE

Source Type SMD LED

General Information

Housing	Aluminium
Product code	BO0457CL155ON
Product family	BRUTUS
Control Gear	Built-in ECG
Options for Dimming Control	On-Off
Height	350 mm
Diameter	100 mm

Electrical data

Consumption	12 W
Performance	50.67 lm/W
Nominal Voltage	230 V

Luminaire Output

Luminous Flux	608 lm
CRI CCT	840

Light distribution

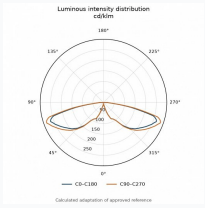

Safety characteristics

IK	10
IP	65

Temperature Operating Conditions