MAGNUM GAS



Technical drawings

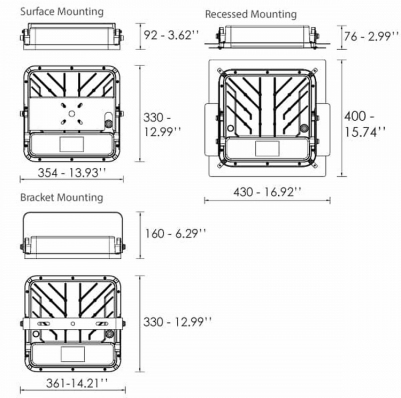

Product Details

CE

Source Type SMD LED

General Information

Product code	CM0756ON
Product family	MAGNUM
Options for Dimming Control	On-Off
Width	400 mm
Length	430 mm
Height	76 mm

Electrical data

Consumption	80 W
Performance	165 lm/W

Luminaire Output

Beam Type	VW
Beam	90º
Luminous Flux	13200 lm
CRI CCT	757

Light distribution

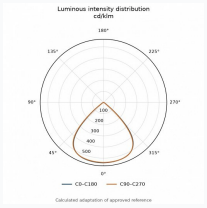

Safety characteristics

Protection Class	Class I

Temperature Operating Conditions