MAGNUM GAS



Technical drawings

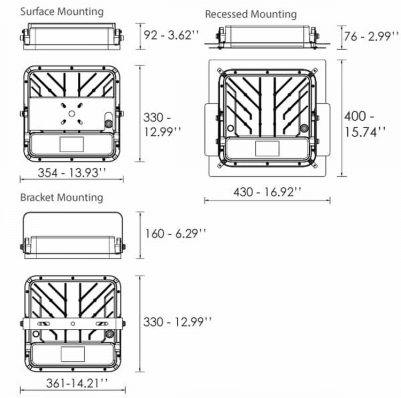

Product Details

CE

Source Type SMD LED

General Information

Product code	CM0759DA
Product family	MAGNUM
Options for Dimming Control	DALI2
Width	400 mm
Length	430 mm
Height	76 mm

Electrical data

Consumption	80 W
Performance	165 lm/W

Luminaire Output

Beam Type	VW
Beam	120º
Luminous Flux	13200 lm
CRI CCT	757

Light distribution

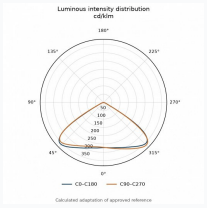

Safety characteristics

Protection Class	Class I

Temperature Operating Conditions