HEADOFFICE: Showroom 13 Sofokli Venizelou Ave., Likovrisi, P.O. Box 14123, Athens, Greece Tel: (+30) 210 2851 304 I www.bright.gr I info@bright.gr

MAGNUM GAS



Technical drawings

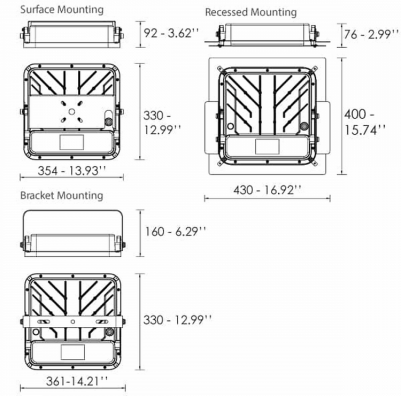

Product Details

CE

Source Type SMD LED

General Information

Product code	CM0761ON
Product family	MAGNUM
Options for Dimming Control	On-Off
Width	330 mm
Length	354 mm
Height	92 mm

Electrical data

Consumption	100 W
Performance	152 lm/W

Luminaire Output

Beam Type	W
Beam	60º
Luminous Flux	15200 lm
CRI CCT	730

Light distribution

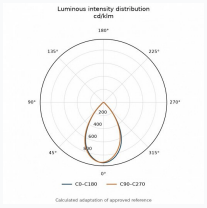

Safety characteristics

Protection Class	Class I

Temperature Operating Conditions