MAGNUM GAS



Technical drawings

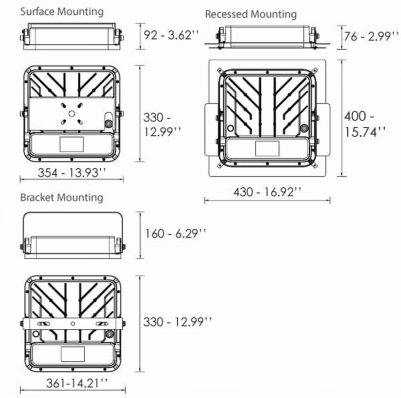

Product Details

CE

Source Type SMD LED

General Information

Product code	CM0766ON
Product family	MAGNUM
Options for Dimming Control	On-Off
Width	330 mm
Length	361 mm
Height	160 mm

Electrical data

Consumption	100 W
Performance	152 lm/W

Luminaire Output

Beam Type	VW
Beam	90º
Luminous Flux	15200 lm
CRI CCT	730

Light distribution

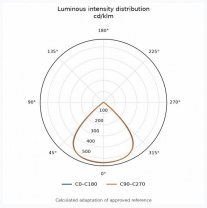

Safety characteristics

Protection Class	Class I

Temperature Operating Conditions