MAGNUM GAS



Technical drawings

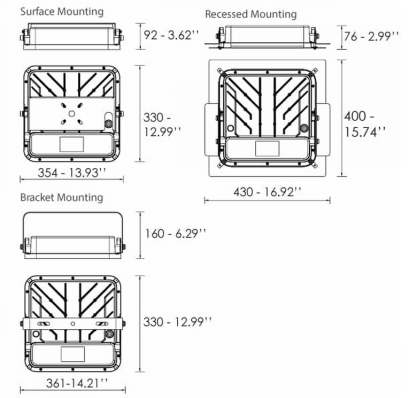

Product Details

CE

Source Type SMD LED

General Information

Housing	Aluminium
Product code	CM0770ON
Product family	MAGNUM
Options for Dimming Control	On-Off
Width	330 mm
Length	354 mm
Height	92 mm

Electrical data

Consumption	100 W
Performance	160 lm/W

Luminaire Output

Beam Type	W
Beam	60º
Luminous Flux	16000 lm
CRI CCT	740

Light distribution

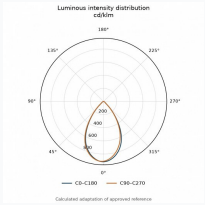

Safety characteristics

Protection Class	Class I

Temperature Operating Conditions