MAGNUM GAS



Technical drawings

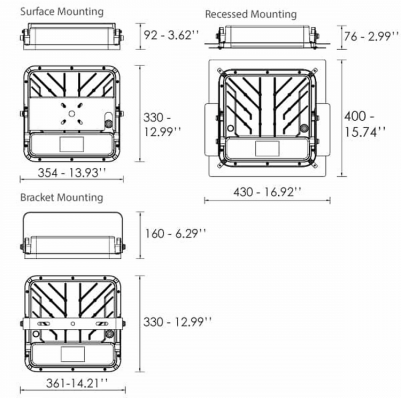

Product Details

CE

Source Type SMD LED

General Information

Housing	Aluminium
Product code	CM0770DA
Product family	MAGNUM
Options for Dimming Control	DALI2
Width	330 mm
Length	354 mm
Height	92 mm

Electrical data

Consumption	100 W
Performance	160 lm/W

Luminaire Output

Beam Type	W
Beam	60º
Luminous Flux	16000 lm
CRI CCT	740

Light distribution

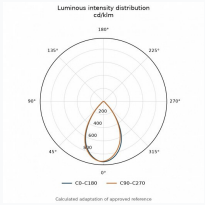

Safety characteristics

Protection Class	Class I

Temperature Operating Conditions