MAGNUM GAS



Technical drawings

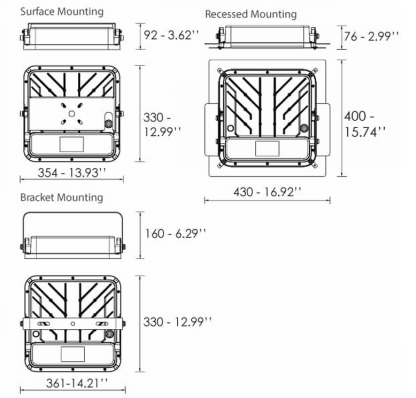

Product Details

CE

Source Type SMD LED

General Information

Housing	Aluminium
Product code	CM0774ON
Product family	MAGNUM
Options for Dimming Control	On-Off
Width	400 mm
Length	430 mm
Height	76 mm

Electrical data

Consumption	100 W
Performance	160 lm/W

Luminaire Output

Beam Type	VW
Beam	90º
Luminous Flux	16000 lm
CRI CCT	740

Light distribution

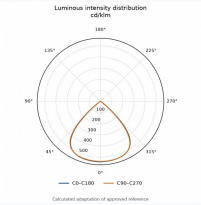

Safety characteristics

Protection Class	Class I

Temperature Operating Conditions