MAGNUM GAS



Technical drawings

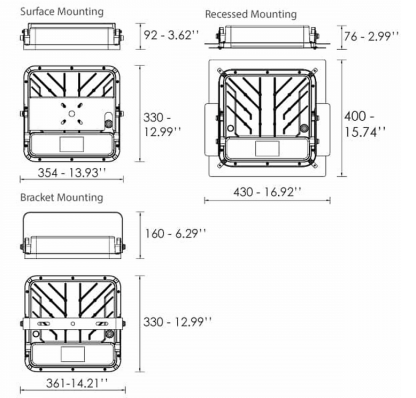

Product Details

CE

Source Type SMD LED

General Information

Housing	Aluminium
Product code	CM0783DA
Product family	MAGNUM
Options for Dimming Control	DALI2
Width	400 mm
Length	430 mm
Height	76 mm

Electrical data

Consumption	100 W
Performance	160 lm/W

Luminaire Output

Beam Type	VW
Beam	90º
Luminous Flux	16000 lm
CRI CCT	750

Light distribution

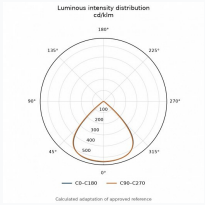

Safety characteristics

Protection Class	Class I

Temperature Operating Conditions