MAGNUM GAS



Technical drawings

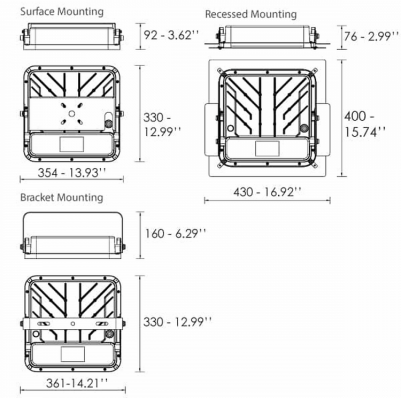

Product Details

CE

Source Type SMD LED

General Information

Housing	Aluminium
Product code	CM0793DA
Product family	MAGNUM
Options for Dimming Control	DALI2
Width	330 mm
Length	361 mm
Height	160 mm

Electrical data

Consumption	100 W
Performance	160 lm/W

Luminaire Output

Beam Type	VW
Beam	90º
Luminous Flux	16000 lm
CRI CCT	757

Light distribution

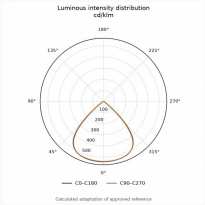

Safety characteristics

Protection Class	Class I

Temperature Operating Conditions