# MAGNUM GAS




## Technical drawings

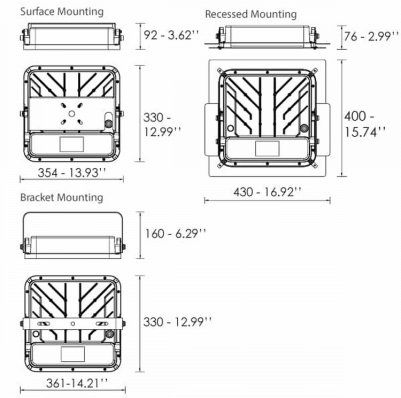


## Product Details

CE

Source Type SMD LED

### General Information

| | |
|---|---|
| Housing | Aluminium |
| Product code | CM0799ON |
| Product family | MAGNUM |
| Options for Dimming Control | On-Off |
| Width | 330 mm |
| Length | 361 mm |
| Height | 160 mm |

### Electrical data

| | |
|---|---|
| Consumption | 120 W |
| Performance | 152 lm/W |

### Luminaire Output

| | |
|---|---|
| Beam Type | W |
| Beam | 60º |
| Luminous Flux | 18240 lm |
| CRI CCT | 730 |

### Light distribution

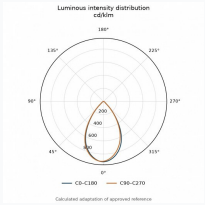


### Safety characteristics

| | |
|---|---|
| Protection Class | Class I |

### Temperature Operating Conditions