MAGNUM GAS



Technical drawings

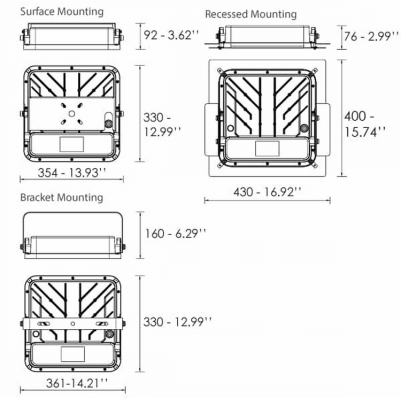

Product Details

CE

Source Type SMD LED

General Information

Product code	CM0807DA
Product family	MAGNUM
Options for Dimming Control	DALI2
Width	400 mm
Length	430 mm
Height	76 mm

Electrical data

Consumption	120 W
Performance	160 lm/W

Luminaire Output

Beam Type	W
Beam	60º
Luminous Flux	19200 lm
CRI CCT	740

Light distribution

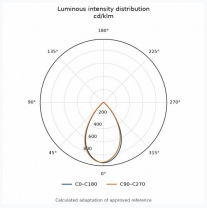

Safety characteristics

Protection Class	Class I

Temperature Operating Conditions