MAGNUM GAS



Technical drawings

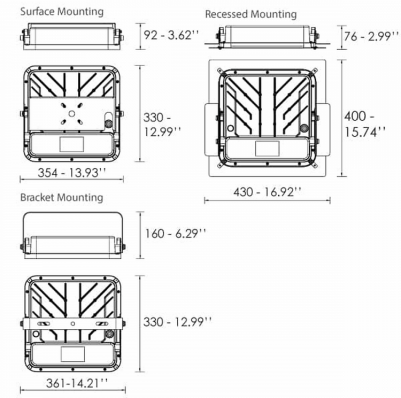

Product Details

CE

Source Type SMD LED

General Information

Product code	CM0816ON
Product family	MAGNUM
Options for Dimming Control	On-Off
Width	400 mm
Length	430 mm
Height	76 mm

Electrical data

Consumption	120 W
Performance	160 lm/W

Luminaire Output

Beam Type	W
Beam	60º
Luminous Flux	19200 lm
CRI CCT	750

Light distribution

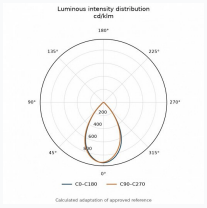

Safety characteristics

Protection Class	Class I

Temperature Operating Conditions