# MAGNUM GAS




## Technical drawings

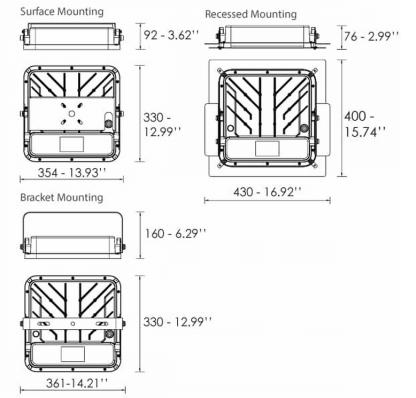


## Product Details

CE

Source Type SMD LED

### General Information

| | |
|---|---|
| Housing | Aluminium |
| Product code | CM0846DA |
| Product family | MAGNUM |
| Options for Dimming Control | DALI2 |
| Width | 400 mm |
| Length | 430 mm |
| Height | 76 mm |

### Electrical data

| | |
|---|---|
| Consumption | 150 W |
| Performance | 155 lm/W |

### Luminaire Output

| | |
|---|---|
| Beam Type | VW |
| Beam | 90º |
| Luminous Flux | 23250 lm |
| CRI CCT | 740 |

### Light distribution

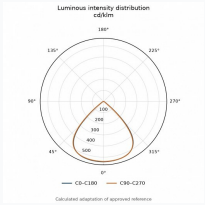


### Safety characteristics

| | |
|---|---|
| Protection Class | Class I |

### Temperature Operating Conditions