NINIO 2 OPAL LINEAR LED



Technical drawings

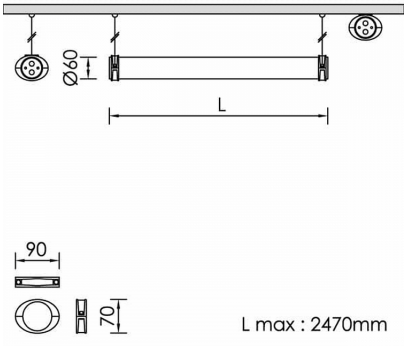

Product Details

CE LM80 Source Type Linear LED

General Information

Housing	PMMA
Product code	FA4070CL009DA
Product family	NINIO
Diffuser	Clear PMMA
Control Gear	Built-in ECG
Options for Dimming Control	DALI2
Height	70 mm

Electrical data

Consumption	44.17 W
Performance	113.86 lm/W
Ripple	3
Nominal Voltage	230 V

Luminaire Output

Luminous Flux	5029 lm
CRI CCT	930

Light distribution

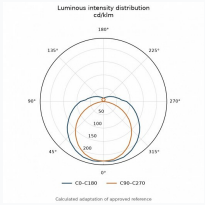

Safety characteristics

IK	05
IP	68

Temperature Operating Conditions