PURE 230 CLEAR



Technical drawings

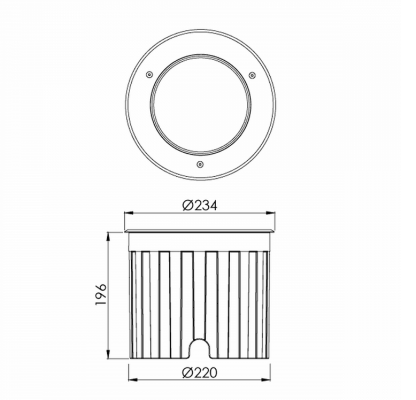

Product Details

CE

Source Type SMD LED

General Information

Housing	Aluminium, Stainless steel
Product code	GR0473CL135DA
Product family	PURE
Diffuser	Safety Glass Clear
Control Gear	Remote Electronic Driver
Options for Dimming Control	DALI2
Height	196 mm
Diameter	234 mm

Electrical data

Consumption	36 W
Performance	72 lm/W

Luminaire Output

Beam Type	N
Beam	20º
Luminous Flux	2592 lm
CRI CCT	830

Light distribution

Safety characteristics

IK	10
IP	68
Protection Class	Class III

Temperature Operating Conditions