SOROR 2



Technical drawings

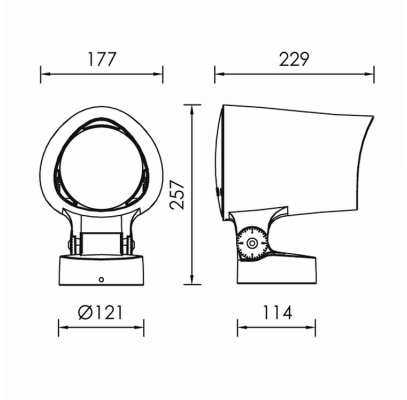

Product Details

CE

Source Type SMD LED

General Information

Housing	Aluminium
Product code	PJ0621CL002ON
Product family	SOROR
Diffuser	Clear safety glass / Fresnel
Control Gear	Built-in ECG
Options for Dimming Control	On-Off
Width	177 mm
Length	229 mm
Height	257 mm

Electrical data

Consumption	45 W
Performance	74 lm/W
Nominal Voltage	230 V

Luminaire Output

Beam Type	N
Beam	20º
Luminous Flux	3330 lm
CRI CCT	840

Light distribution

Safety characteristics

IK	08
IP	67
Protection Class	Class I

Temperature Operating Conditions