SOROR 4



Technical drawings

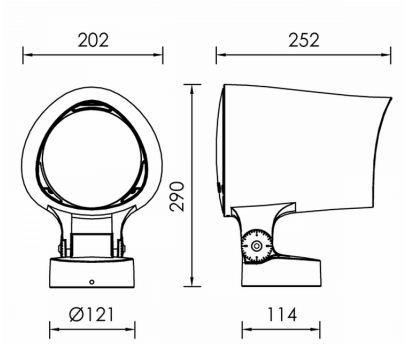

Product Details

CE

Source Type SMD LED

General Information

Housing	Aluminium
Product code	PJ0635CL003DA
Product family	SOROR
Diffuser	Clear safety glass / Fresnel
Control Gear	Built-in ECG
Options for Dimming Control	DALI2
Width	202 mm
Length	252 mm
Height	290 mm

Electrical data

Consumption	70 W
Performance	74 lm/W
Nominal Voltage	230 V

Luminaire Output

Beam Type	W
Beam	40º
Luminous Flux	5180 lm
CRI CCT	840

Light distribution

Safety characteristics

IK	08
IP	67
Protection Class	Class I

Temperature Operating Conditions