HEADOFFICE: Showroom 13 Sofokli Venizelou Ave., Likovrisi, P.O. Box 14123, Athens, Greece Tel: (+30) 210 2851 304 I www.bright.gr I info@bright.gr

STRADALE S



Technical drawings

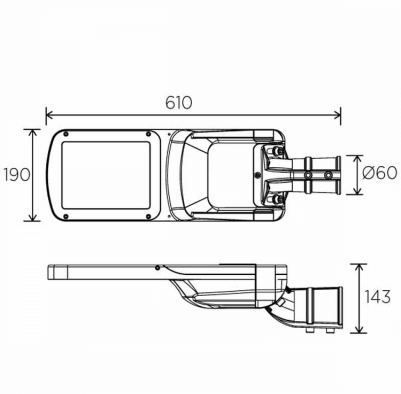

Product Details

CE

Source Type SMD LED

General Information

Housing	Aluminium
Product code	ST0036AN
Product family	STRADALE
Options for Dimming Control	1–10V
Width	190 mm
Length	610 mm
Height	143 mm

Electrical data

Consumption	20 W
Performance	165 lm/W

Luminaire Output

Beam Type	III
Luminous Flux	3300 lm
CRI CCT	750

Light distribution

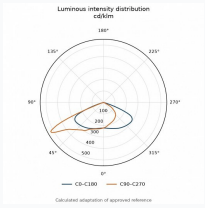

Safety characteristics

IK	10
IP	66
Protection Class	Class II

Temperature Operating Conditions