HEADOFFICE: Showroom 13 Sofokli Venizelou Ave., Likovrisi, P.O. Box 14123, Athens, Greece Tel: (+30) 210 2851 304 I www.bright.gr I info@bright.gr

# STRADALE S



## Technical drawings

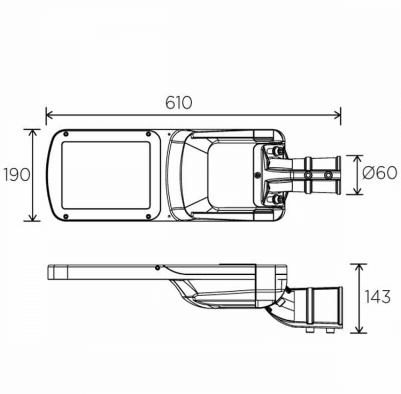


## Product Details

CE

Source Type SMD LED

### General Information

| | |
|---|---|
| Housing | Aluminium |
| Product code | ST0120AN |
| Product family | STRADALE |
| Options for Dimming Control | 1–10V |
| Width | 190 mm |
| Length | 610 mm |
| Height | 143 mm |

### Electrical data

| | |
|---|---|
| Consumption | 80 W |
| Performance | 140 lm/W |

### Luminaire Output

| | |
|---|---|
| Beam Type | III |
| Luminous Flux | 11200 lm |
| CRI CCT | 757 |

### Light distribution

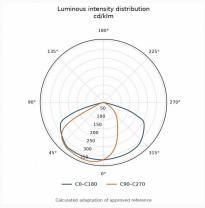


### Safety characteristics

| | |
|---|---|
| IK | 10 |
| IP | 66 |
| Protection Class | Class II |

### Temperature Operating Conditions