STRADALE M



Technical drawings

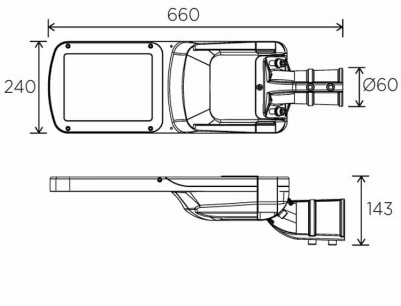

Product Details

CE

Source Type SMD LED

General Information

Product code	ST0399DA
Product family	STRADALE
Options for Dimming Control	DALI2
Width	240 mm
Length	660 mm
Height	143 mm

Electrical data

Consumption	100 W
Performance	165 lm/W

Luminaire Output

Beam Type	II
Luminous Flux	16500 lm
CRI CCT	757

Light distribution

Safety characteristics

IK	10
IP	66
Protection Class	Class II

Temperature Operating Conditions