# STRADALE L



## Technical drawings

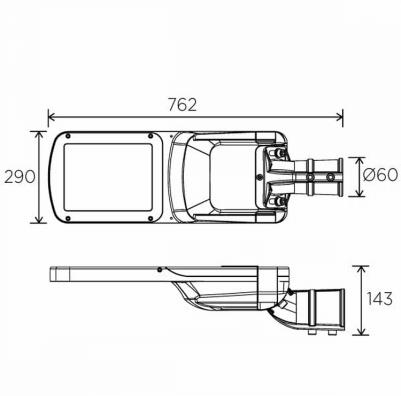


## Product Details

CE

Source Type SMD LED

### General Information

| | |
|---|---|
| Product code | ST0514DA |
| Product family | STRADALE |
| Options for Dimming Control | DALI2 |
| Width | 290 mm |
| Length | 762 mm |
| Height | 143 mm |

### Electrical data

| | |
|---|---|
| Consumption | 200 W |
| Performance | 150 lm/W |

### Luminaire Output

| | |
|---|---|
| Beam Type | II |
| Luminous Flux | 30000 lm |
| CRI CCT | 750 |

### Light distribution

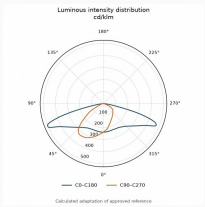


### Safety characteristics

| | |
|---|---|
| IK | 10 |
| IP | 66 |
| Protection Class | Class II |

### Temperature Operating Conditions