STRADALE L



Technical drawings

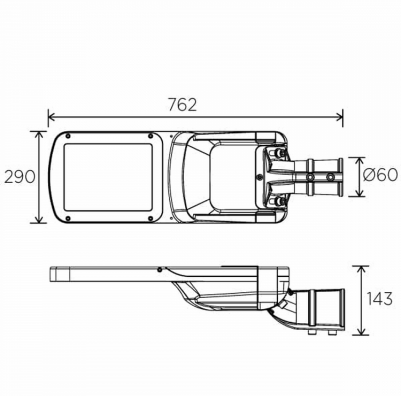

Product Details

CE

Source Type SMD LED

General Information

Product code	ST0515AN
Product family	STRADALE
Options for Dimming Control	1–10V
Width	290 mm
Length	762 mm
Height	143 mm

Electrical data

Consumption	200 W
Performance	150 lm/W

Luminaire Output

Beam Type	III
Luminous Flux	30000 lm
CRI CCT	750

Light distribution

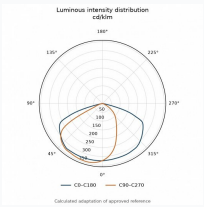

Safety characteristics

IK	10
IP	66
Protection Class	Class II

Temperature Operating Conditions