STRADALE L



Technical drawings

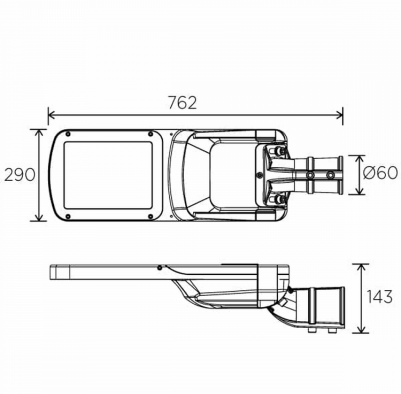

Product Details

CE

Source Type SMD LED

General Information

Housing	Aluminium
Product code	ST0573AN
Product family	STRADALE
Options for Dimming Control	1–10V
Width	290 mm
Length	762 mm
Height	143 mm

Electrical data

Consumption	150 W
Performance	165 lm/W

Luminaire Output

Beam Type	II
Luminous Flux	24750 lm
CRI CCT	750

Light distribution

Safety characteristics

IK	10
IP	66
Protection Class	Class II

Temperature Operating Conditions