HEADOFFICE: Showroom 13 Sofokli Venizelou Ave., Likovrisi, P.O. Box 14123, Athens, Greece Tel: (+30) 210 2851 304 I www.bright.gr I info@bright.gr

STRADALE MICRO S



Technical drawings

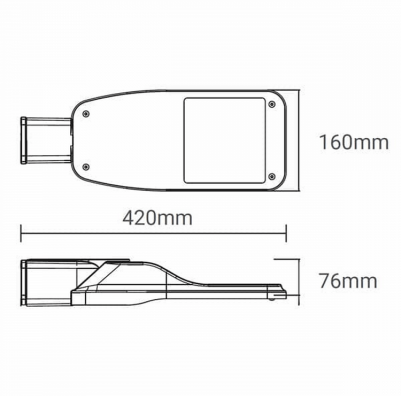

Product Details

CE

Source Type SMD LED

General Information

Product code	ST0661ON
Product family	STRADALE
Options for Dimming Control	On-Off
Width	160 mm
Length	420 mm
Height	76 mm

Electrical data

Consumption	30 W
Performance	130 lm/W

Luminaire Output

Beam Type	III
Luminous Flux	3900 lm
CRI CCT	757

Light distribution

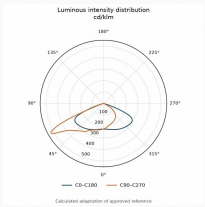

Safety characteristics

IK	10
IP	66
Protection Class	Class II

Temperature Operating Conditions