STRADALE MICRO S



Technical drawings

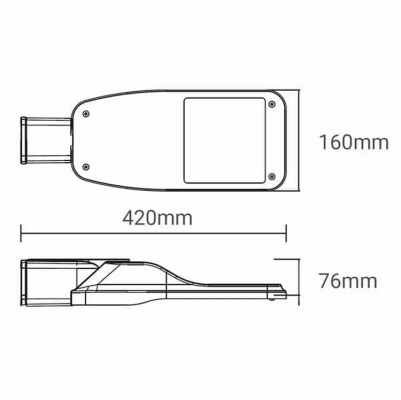

Product Details

CE

Source Type SMD LED

General Information

Product code	ST0661DA
Product family	STRADALE
Options for Dimming Control	DALI2
Width	160 mm
Length	420 mm
Height	76 mm

Electrical data

Consumption	30 W
Performance	130 lm/W

Luminaire Output

Beam Type	III
Luminous Flux	3900 lm
CRI CCT	757

Light distribution

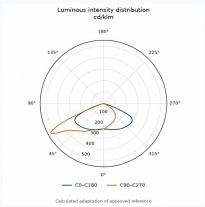

Safety characteristics

IK	10
IP	66
Protection Class	Class II

Temperature Operating Conditions