STRADALE MICRO S



Technical drawings

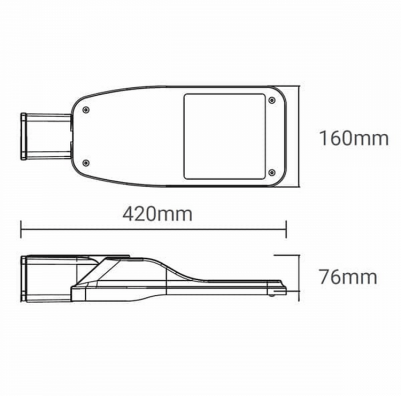

Product Details

CE

Source Type SMD LED

General Information

Housing	Aluminium
Product code	ST0680ON
Product family	STRADALE
Options for Dimming Control	On-Off
Width	160 mm
Length	420 mm
Height	76 mm

Electrical data

Consumption	40 W
Performance	130 lm/W

Luminaire Output

Beam Type	III
Luminous Flux	5200 lm
CRI CCT	757

Light distribution

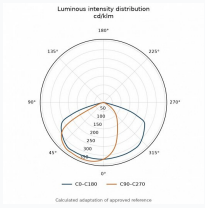

Safety characteristics

IK	10
IP	66
Protection Class	Class II

Temperature Operating Conditions