STRADALE MICRO S



Technical drawings

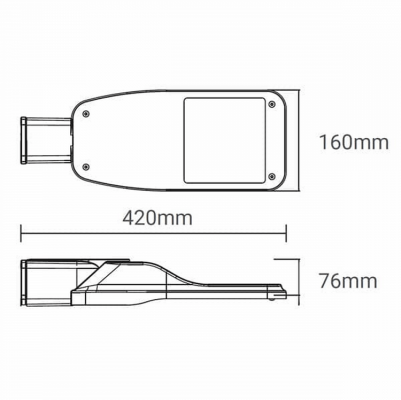

Product Details

CE

Source Type SMD LED

General Information

Product code	ST0753ON
Product family	STRADALE
Options for Dimming Control	On-Off
Width	160 mm
Length	420 mm
Height	76 mm

Electrical data

Consumption	50 W
Performance	140 lm/W

Luminaire Output

Beam Type	II
Luminous Flux	7000 lm
CRI CCT	750

Light distribution

Safety characteristics

IK	10
IP	66
Protection Class	Class II

Temperature Operating Conditions