STRADALE MICRO M



Technical drawings

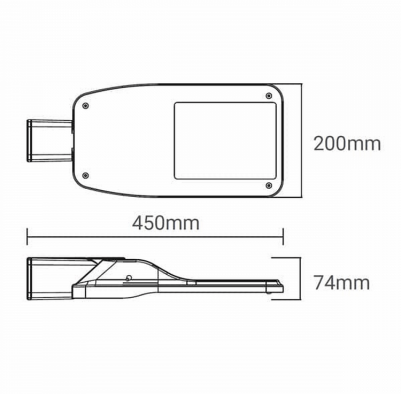

Product Details

CE

Source Type SMD LED

General Information

Product code	ST0793ON
Product family	STRADALE
Options for Dimming Control	On-Off
Width	200 mm
Length	450 mm
Height	74 mm

Electrical data

Consumption	80 W
Performance	130 lm/W

Luminaire Output

Beam Type	II
Luminous Flux	10400 lm
CRI CCT	750

Light distribution

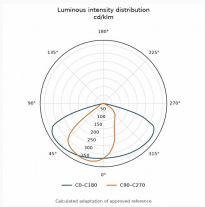

Safety characteristics

IK	10
IP	66
Protection Class	Class II

Temperature Operating Conditions