STRADALE MICRO M



Technical drawings

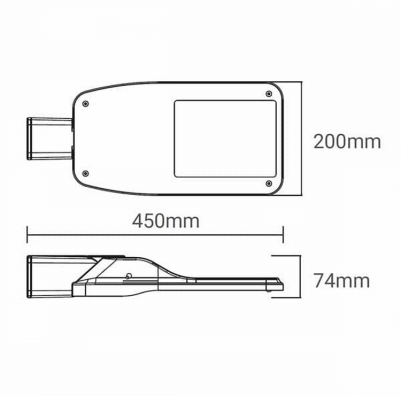

Product Details

CE

Source Type SMD LED

General Information

Housing	Aluminium
Product code	ST0822ON
Product family	STRADALE
Options for Dimming Control	On-Off
Width	200 mm
Length	450 mm
Height	74 mm

Electrical data

Consumption	100 W
Performance	120 lm/W

Luminaire Output

Beam Type	III
Luminous Flux	12000 lm
CRI CCT	757

Light distribution

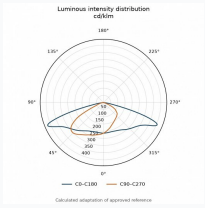

Safety characteristics

IK	10
IP	66
Protection Class	Class II

Temperature Operating Conditions