STRADALE MICRO M



Technical drawings

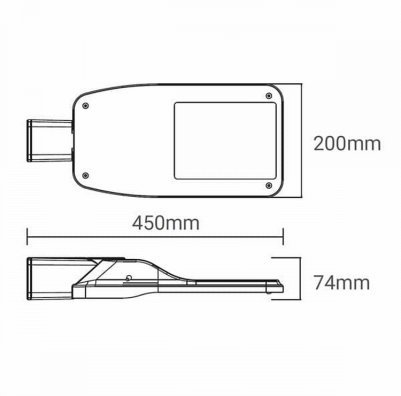

Product Details

CE

Source Type SMD LED

General Information

Product code	ST0874DA
Product family	STRADALE
Options for Dimming Control	DALI2
Width	200 mm
Length	450 mm
Height	74 mm

Electrical data

Consumption	100 W
Performance	130 lm/W

Luminaire Output

Beam Type	II
Luminous Flux	13000 lm
CRI CCT	750

Light distribution

Safety characteristics

IK	10
IP	66
Protection Class	Class II

Temperature Operating Conditions