FORIS M



Technical drawings

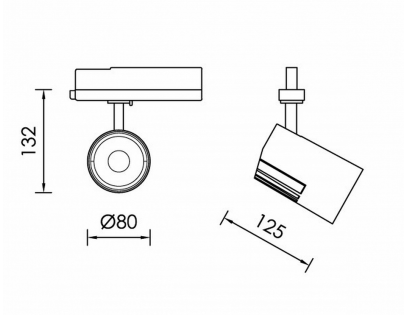

Product Details

CE LM80 LM79 TM21 REACH Source Type COB LED

General Information

Housing	Aluminium
Product code	SP0105CL002ON
Product family	FORIS
Diffuser	Reflector
Control Gear	Built-in ECG
Options for Dimming Control	On-Off
Height	125 mm
Diameter	80 mm

Electrical data

Consumption	22,5 W
Performance	101.47 lm/W
Ripple	3
Power Factor	0.96
Nominal Voltage	230 V

Luminaire Output

Beam Type	M
Beam	36º
Luminous Flux	2283 lm
CRI CCT	935
Glare Indicator Ugr Longwise Optics	25
Glare Indicator Ugr Parallel Optics	25

Light distribution

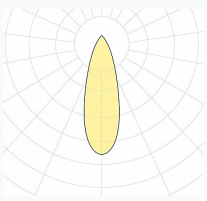

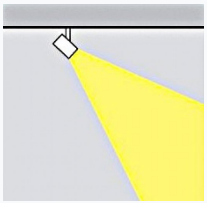

Safety characteristics

IK	07
IP	20
Protection Class	Class I

Temperature Operating Conditions

Lifetime	>60.000h L80B10@35°C
Operating Ambient Temperature	-10...+45°C
Operating Humidity Level	5...95%