VINCO TR



Technical drawings

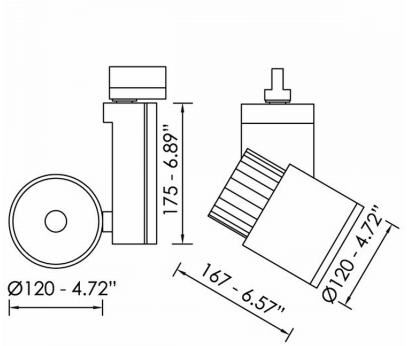

Product Details

CE LM80 LM79 TM21 REACH Source Type COB LED

General Information

Housing	Aluminium
Product code	SP0956CL001DA
Product family	VINCO
Diffuser	Clear Polycarbonate
Control Gear	Built-in ECG
Options for Dimming Control	DALI2
Height	167 mm
Diameter	120 mm

Electrical data

Consumption	26,8 W
Performance	107.5 lm/W
Ripple	3
Power Factor	0.96
Nominal Voltage	230 V

Luminaire Output

Beam Type	XW
Beam	60º
Luminous Flux	2881 lm
CRI CCT	940
Glare Indicator Ugr Longwise Optics	25
Glare Indicator Ugr Parallel Optics	25

Light distribution

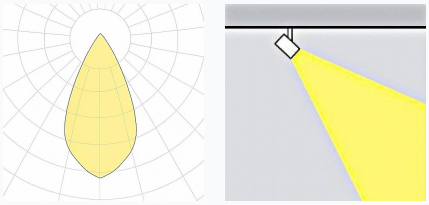

Safety characteristics

IK	07
IP	20
Protection Class	Class I

Temperature Operating Conditions

Lifetime	>60.000h L80B10@35°C
Operating Ambient Temperature	-10...+45°C
Operating Humidity Level	5...95%