PENDO 1R G ADTR



Technical drawings

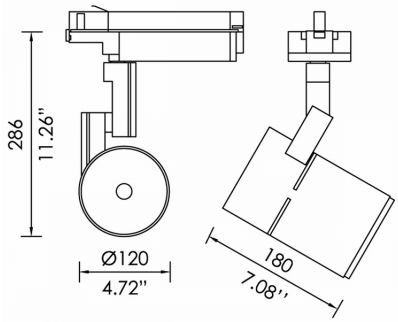

Product Details

CE LM80 LM79 TM21 REACH Source Type COB LED

General Information

Housing	Aluminium
Product code	SP1225CL001DAC
Product family	PENDO
Diffuser	Clear Polycarbonate
Control Gear	Built-in ECG
Options for Dimming Control	DALI2
Options for Wireless Dimming	Casambi
Height	180 mm
Diameter	120 mm

Electrical data

Consumption	12,8 W
Performance	113.91 lm/W
Ripple	3
Power Factor	0.96
Nominal Voltage	230 V

Luminaire Output

Beam Type	N
Beam	15º
Luminous Flux	1458 lm
CRI CCT	930
Glare Indicator Ugr Longwise Optics	18
Glare Indicator Ugr Parallel Optics	18

Light distribution

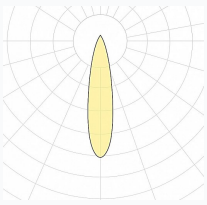

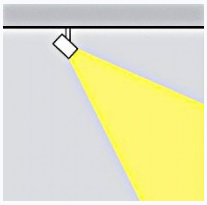

Safety characteristics

IK	07
IP	20
Protection Class	Class II

Temperature Operating Conditions

Lifetime	>60.000h L80B10@35°C
Operating Ambient Temperature	-10...+45°C
Operating Humidity Level	5...95%