PENDO 2R



Technical drawings

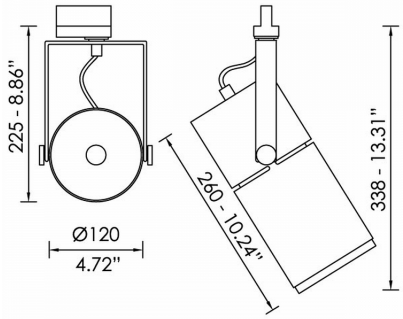

Product Details

CE LM80 LM79 TM21 REACH Source Type COB LED

General Information

Housing	Aluminium
Product code	SP1393CL007ON
Product family	PENDO
Diffuser	Clear Polycarbonate
Control Gear	Built-in ECG
Options for Dimming Control	On-Off
Height	260 mm
Diameter	120 mm

Electrical data

Consumption	31,1 W
Performance	104.02 lm/W
Ripple	3
Power Factor	0.96
Nominal Voltage	230 V

Luminaire Output

Beam Type	W
Beam	40º
Luminous Flux	3235 lm
CRI CCT	940
Glare Indicator Ugr Longwise Optics	23
Glare Indicator Ugr Parallel Optics	23

Light distribution

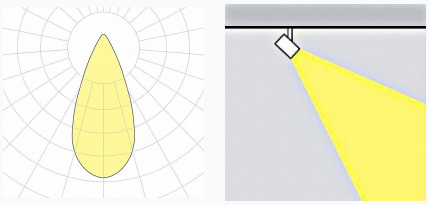

Safety characteristics

IK	07
IP	20

Temperature Operating Conditions

Lifetime	>60.000h L80B10@35°C
Operating Ambient Temperature	-10...+45°C
Operating Humidity Level	5...95%