SALUS 7 H



Technical drawings

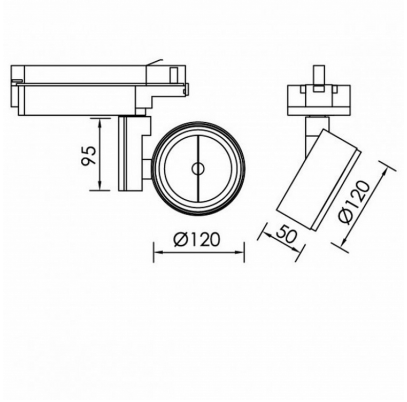

Product Details

CE LM80 LM79 TM21 REACH Source Type COIN 111

General Information

Housing	Aluminium
Product code	SP1562CL003
Product family	SALUS
Control Gear	Built-in ECG
Height	50 mm
Diameter	120 mm

Electrical data

Luminaire Output

Light distribution

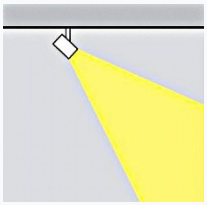

Safety characteristics

IK	02
IP	20

Temperature Operating Conditions