TORRIS 3R ADTR A2 LED



Technical drawings

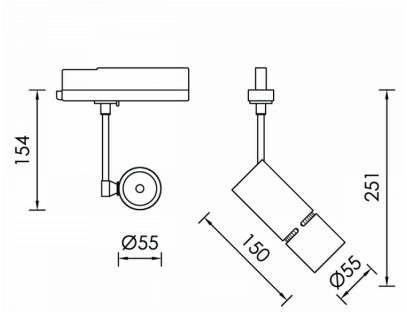

Product Details

CE LM80 LM79 TM21 REACH Source Type COB LED

General Information

Housing	Aluminium
Product code	SP1607CL001DA
Product family	TORRIS
Diffuser	Safety Glass Clear
Control Gear	Built-in ECG
Options for Dimming Control	DALI2
Height	150 mm
Diameter	55 mm

Electrical data

Consumption	6,7 W
Performance	101.49 lm/W
Ripple	3
Power Factor	0.96
Nominal Voltage	230 V

Luminaire Output

Beam Type	NM
Beam	24º
Luminous Flux	680 lm
CRI CCT	930
Glare Indicator Ugr Longwise Optics	22
Glare Indicator Ugr Parallel Optics	22

Light distribution

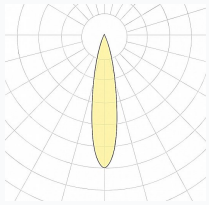

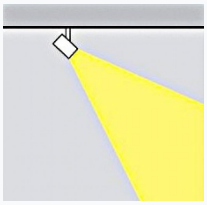

Safety characteristics

IK	04
IP	20
Protection Class	Class II

Temperature Operating Conditions

Lifetime	>60.000h L80B10@35°C
Operating Ambient Temperature	-10...+45°C
Operating Humidity Level	5...95%