LEGATUS POTIS N



Technical drawings

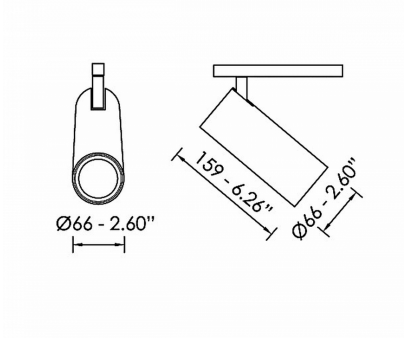

Product Details

CE LM80 LM79 TM21 REACH Source Type COB LED

General Information

Housing	Aluminium
Product code	LV0215CL001DA
Product family	LEGATUS
Diffuser	Safety Glass Clear
Control Gear	Built-in ECG
Options for Dimming Control	DALI2
Height	159 mm
Diameter	66 mm

Electrical data

Consumption	20,4 W
Performance	107.84 lm/W
Ripple	3
Power Factor	0.96
Nominal Voltage	48 V

Luminaire Output

Beam Type	NM
Beam	23º
Luminous Flux	2200 lm
CRI CCT	935
Glare Indicator Ugr Longwise Optics	20
Glare Indicator Ugr Parallel Optics	20

Light distribution

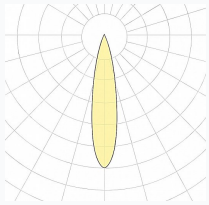

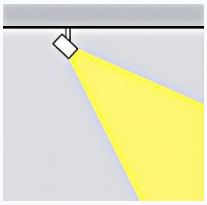

Safety characteristics

IK	07
IP	20
Protection Class	Class III

Temperature Operating Conditions

Lifetime	>60.000h L80B10@35°C
Operating Ambient Temperature	-10...+45°C
Operating Humidity Level	5...95%