LEGATUS LOCUS SP H.P.LED



Technical drawings

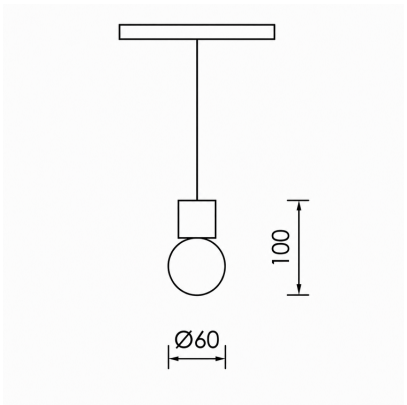

Product Details

CE LM80 LM79 TM21 REACH Source Type H.P. LED

General Information

Housing	Aluminium
Product code	LV0260CL003DAC
Product family	LEGATUS
Diffuser	Opal Glass
Control Gear	Built-in ECG
Options for Dimming Control	DALI2
Options for Wireless Dimming	Casambi
Height	100 mm
Diameter	60 mm

Electrical data

Consumption	1,6 W
Performance	75.63 lm/W
Ripple	3
Power Factor	0.96
Nominal Voltage	48 V

Luminaire Output

Beam Type	VW
Beam	161º
Luminous Flux	121 lm
CRI CCT	930
Glare Indicator Ugr Longwise Optics	21
Glare Indicator Ugr Parallel Optics	21

Light distribution

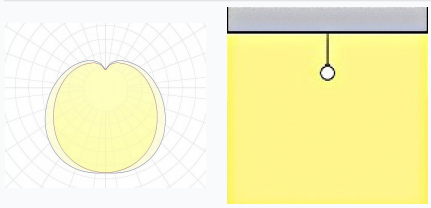

Safety characteristics

IK	02
IP	20
Protection Class	Class III

Temperature Operating Conditions

Lifetime	>60.000h L80B10@35°C
Operating Ambient Temperature	-10...+45°C
Operating Humidity Level	5...95%