BENE 5F IN

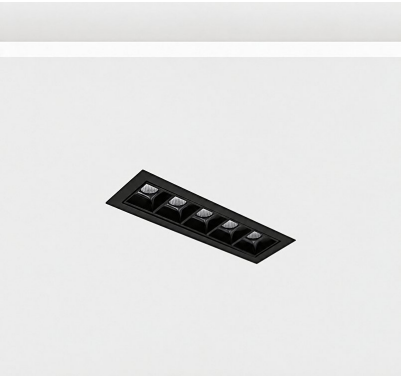

Technical drawings

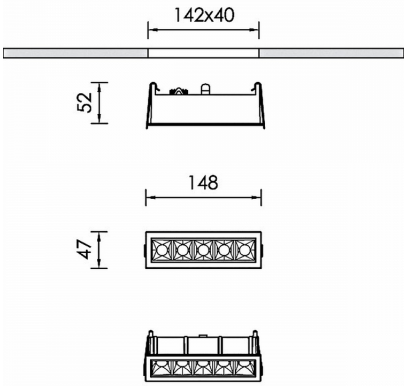

Product Details

CE LM80 LM79 TM21 REACH Source Type Linear LED

General Information

Housing	Aluminium
Product code	DL0068CL003DAC
Product family	BENE
Control Gear	Remote Electronic Driver
Options for Dimming Control	DALI2
Options for Wireless Dimming	Casambi
Width	47 mm
Length	148 mm
Height	52 mm

Electrical data

Consumption	7,6 W
Performance	95.13 lm/W
Ripple	3
Power Factor	0.96
Nominal Voltage	15 V

Luminaire Output

Beam Type	M
Beam	30º
Luminous Flux	723 lm
CRI CCT	930
Glare Indicator Ugr Longwise Optics	8
Glare Indicator Ugr Parallel Optics	7

Light distribution

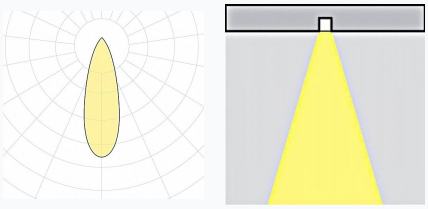

Safety characteristics

IK	04
IP	20
Protection Class	Class III

Temperature Operating Conditions

Lifetime	>60.000h L80B10@35°C
Operating Ambient Temperature	-10...+45°C
Operating Humidity Level	5...95%