BENE 5F IN

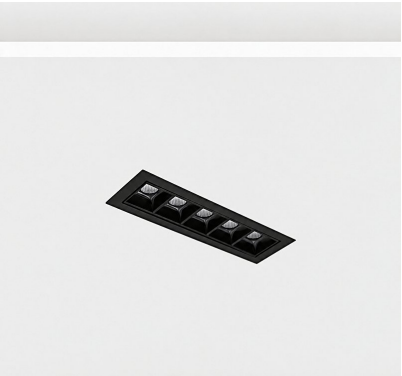

Technical drawings

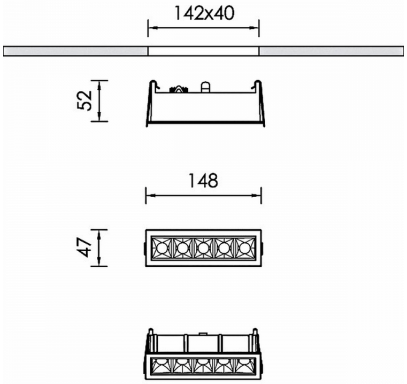

Product Details

CE LM80 LM79 TM21 REACH Source Type Linear LED

General Information

Housing	Aluminium
Product code	DL0076CL003ON
Product family	BENE
Diffuser	PMMA
Control Gear	Remote Electronic Driver
Options for Dimming Control	On-Off
Width	47 mm
Length	148 mm
Height	52 mm

Electrical data

Consumption	5,2 W
Performance	106.54 lm/W
Ripple	3
Power Factor	0.96
Nominal Voltage	15 V

Luminaire Output

Beam Type	M
Beam	30º
Luminous Flux	554 lm
CRI CCT	940
Glare Indicator Ugr Longwise Optics	7
Glare Indicator Ugr Parallel Optics	6

Light distribution

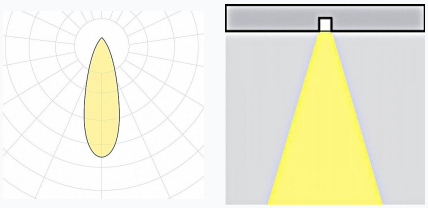

Safety characteristics

IK	04
IP	20
Protection Class	Class III

Temperature Operating Conditions

Lifetime	>60.000h L80B10@35°C
Operating Ambient Temperature	-10...+45°C
Operating Humidity Level	5...95%